Double skin tanks for underground storage diesel fuel

Manufactured in accordance with UNI EN 12285-1 norms of 2003 class A

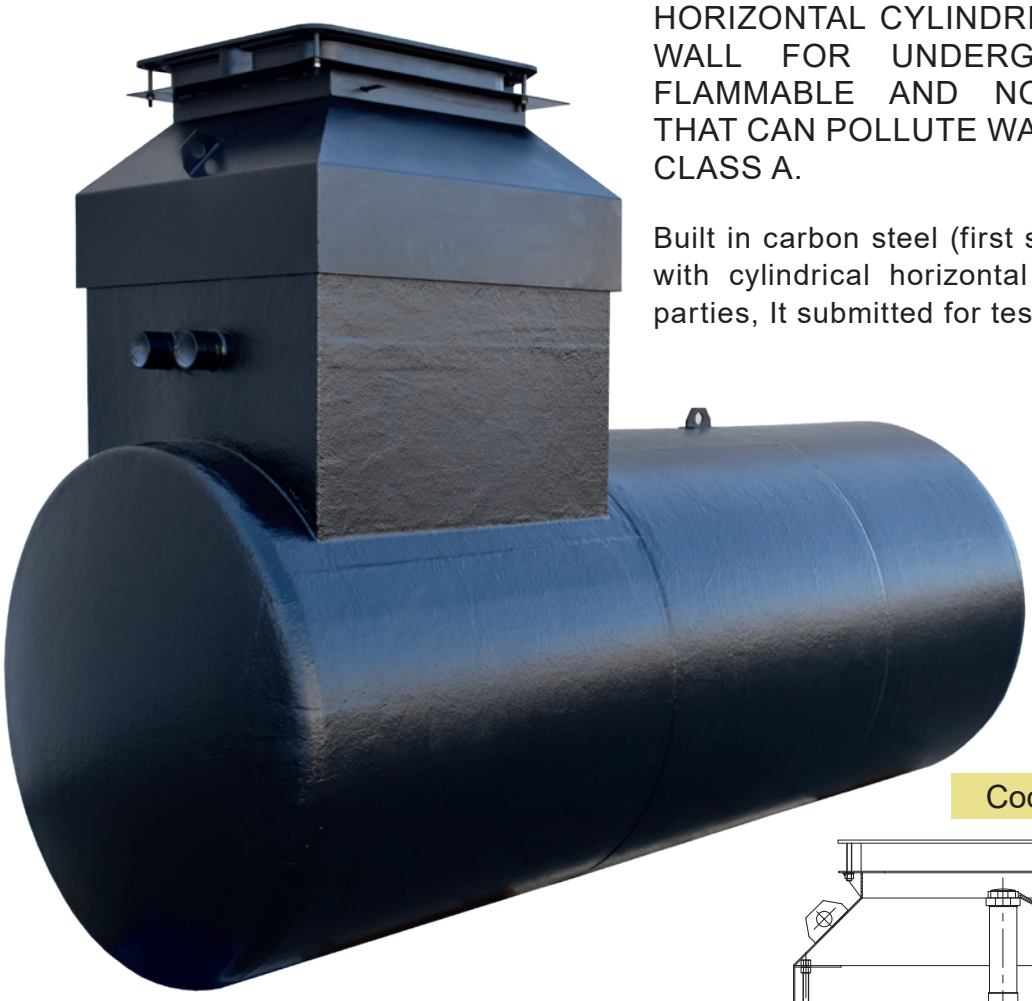

HORIZONTAL CYLINDRICAL TANK WITH DOUBLE WALL FOR UNDERGROUND DEPOSITS OF FLAMMABLE AND NON-FLAMMABLE LIQUIDS THAT CAN POLLUTE WATER. UNI EN 12285-1 2003 CLASS A.

Built in carbon steel (first sheet S235JR UNI EN 10025) with cylindrical horizontal axle, welded be tween the parties, It submitted for testing hydraulic tightness.

Cockpit adjustable in height

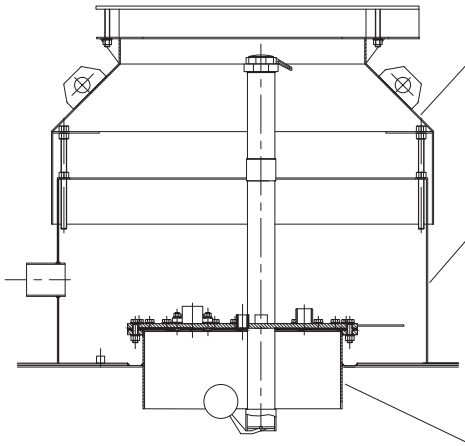

The cockpit tank adjustable in height with cast iron manhole for transit vehicles (400 KN) and opening SERVO-ASSISTED.

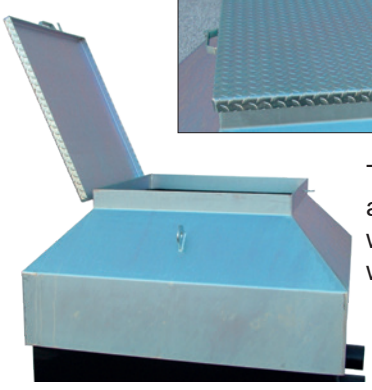

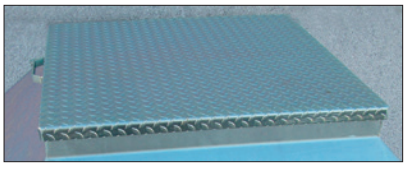

The cockpit tank adjustable in height with galvanized walkable plate.

FEATURES

- Manhole diameter 745 mm with connections, n° 24 bolt and seals.
- Load-limiting valve calibrated at 90% of the tank geometric capacity.
- 3” lockable rapid coupling ring-nut
- non-return valve 1” with pin overpressure and steel mesh filter.
- 1”-1/2 pressure relief valve with flame-breaker mash.
- 1200x1200 mm anti-spill sump welded to the tank for the containment tank to contain any fuel spills during fuel loading.
- Cockpit extension adjustable in height from h = 900/1100 mm.
- Manhole cover in the models: WALKABLE (in striped plate with manual opening) or CARRIAGEABLE (in cast iron, 400 KN, with servo-assisted opening).
- Leakage control device (overpressure).
- External coating for the protection of the tank from chemical and electrochemical agents outside the ground.
- 2 collars 108 mm diameter welded to the front cockpit
- Eyebolts.
- Tank booklet, conformity, performance and test certificates.
- Level table.

	Tank capacity	External diameter	Tank Height	Tank Length	Wall thickness inner-outer	Tank Weight
Code	litres	mm	mm	mm	mm	kg.
SI3	**3.000**	1.600	2.650	1.650	5 + 3	900
SI4	**4.000**	1.600	2.650	2.250	5 + 3	1.000
SI5	**5.000**	1.600	2.650	2.700	5 + 3	1.200
SI6	**6.000**	1.600	2.650	3.200	5 + 3	1.400
SI8	**8.000**	1.600	2.650	4.200	5 + 3	1.700
SI9	**9.000**	1.600	2.650	4.700	5 + 3	1.900
SI10	**10.000**	1.600	2.650	5.200	5 + 3	2.000
SI12	**12.000**	1.600	2.650	6.200	5 + 3	2.500
SI15	**15.000**	2.000	3.050	5.000	6 + 3	2.900
SI20	**20.000**	2.000	3.050	6.600	6 + 3	3.600
SI25	**25.000**	2.000	3.050	8.300	6 + 3	4.500
SI30	**30.000**	2.500	3.550	6.500	6+4/5	5.000
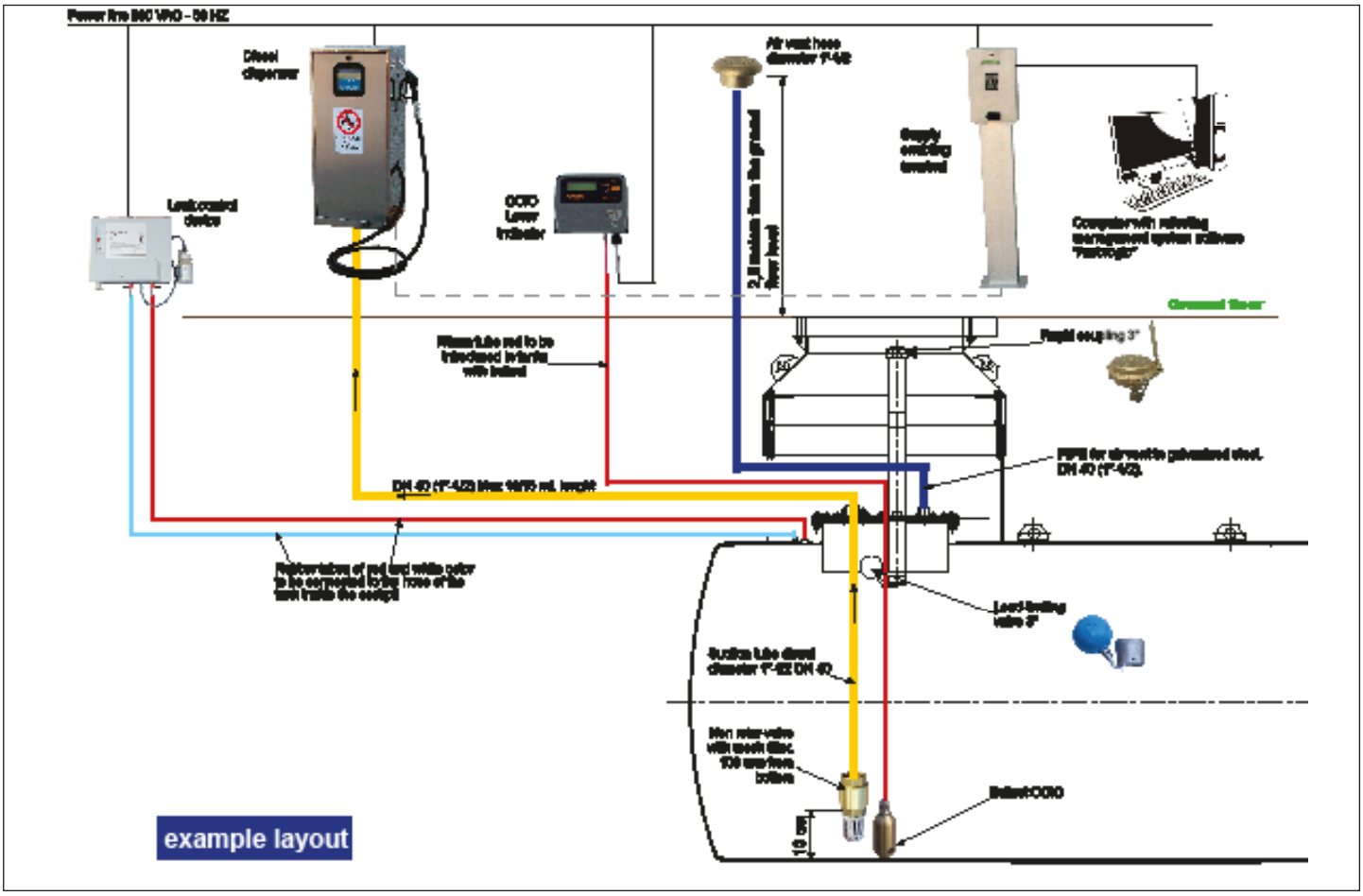
Manhole with connections, n° 24 bolt and seals